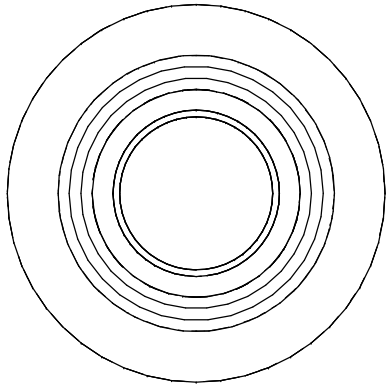

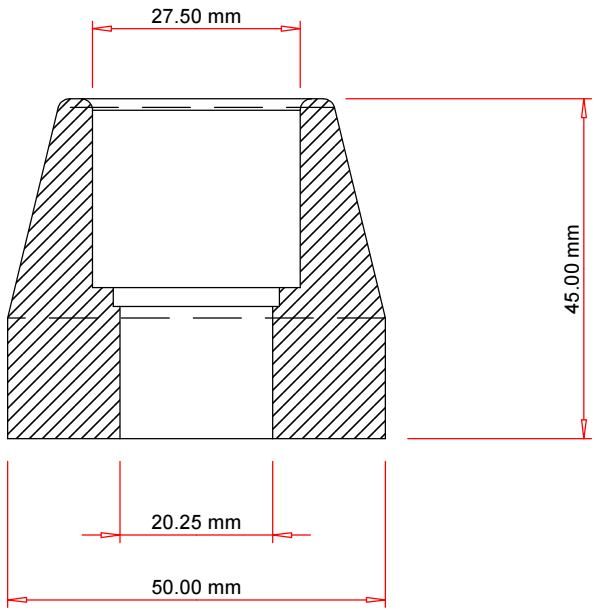

No.	REVISION	BY	CHKD	DATE
0	ORIGINAL ISSUE	P.S.		

DESCRIPTION
BUMPSTOP BS015

© COPYRIGHT. ALL RIGHTS RESERVED
THIS DRAWING IS STRICTLY CONFIDENTIAL AND MUST NOT BE COPIED, REPRODUCED OR ADAPTED, NOR MAY ARTICLES BE MANUFACTURED IN ACCORDANCE WITH THE DRAWING WITHOUT PRIOR WRITTEN PERMISSION OF POWERFLEX.

POWERFLEX
ELEPTO LTD

MATERIAL
POLYURETHANE SHORE A 70

DRAWING No.
BS015

REV
0